Hydraulic Hand Pumps

PM 6-12-25-45 byB-s
with release hand knob with pressure relief valve double acting hand pump for single acting cylinder for fixing to tank

Specifications:
- Cast iron body
- Piston treated with Niploy
- White zinc plated support lever
- Lever connection Ø 27
- White zinc plated external parts
- Standard colour black
- Oil tank mounting kit included
- Pressure relief valve standard setting: 100 bar

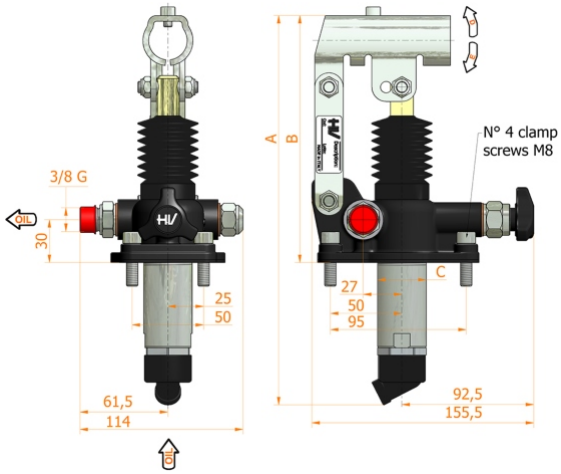

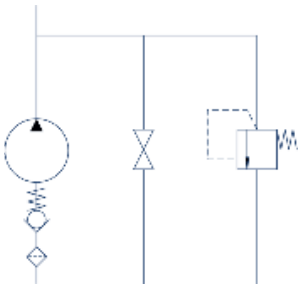

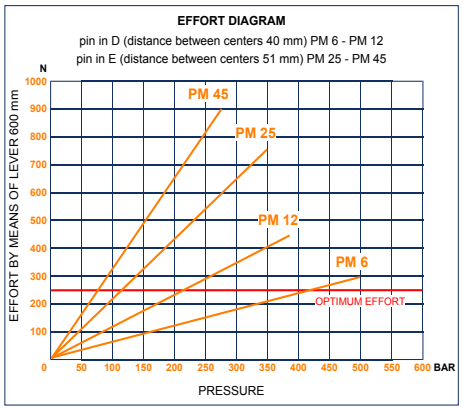

DISPLACEMENT cm³	A mm	B mm	C mm	D °	E °	ACTUAL DISPLACEMENT cm³	PRESSURE BAR		MASS KG	CODE WITHOUT BELLOWS	CODE WITH BELLOWS
							OPTIMAL	MAX			
6	253	166	34	26	31	6,970	420	500	2,900	6049.0109	6049.0117
12	253	166	34	26	31	12,095	220	380	2,900	6050.0109	6050.0117
25	273	172	34	30	30	25,280	120	350	2,950	6051.0109	6051.0117
45	283	172	40	45	33	44,532	80	280	3,000	6052.0109	6052.0117