Hydraulic Hand Pumps

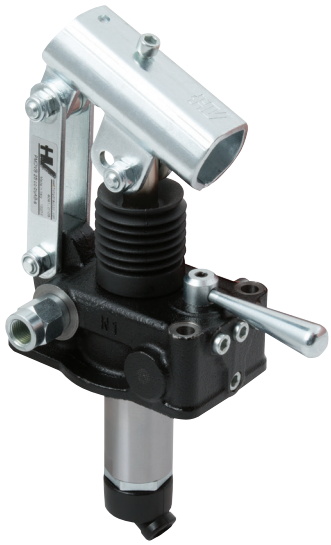

PMDVB 6-12-25-45 cc-byAB-s
with 4/3 diverter closed centre with dual pilot check valve with brakes - with pressure relief valve double acting hand pump for a double acting cylinder for fixing to tank

Specifications:
- Cast iron body
- Piston treated with Niploy
- White zinc plated support lever
- Lever connection Ø 27
- White zinc plated external parts
- Standard colour black
- Oil tank mounting kit included
- With hydraulic brakes to operate under 50 bar pressure
- Pressure relief valve standard setting: 100 bar

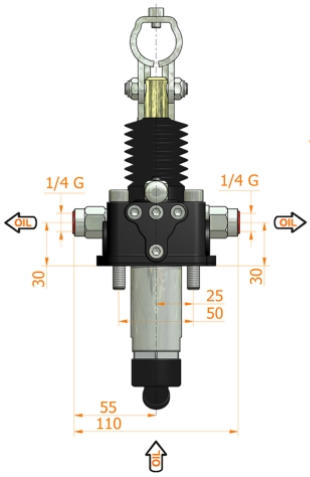

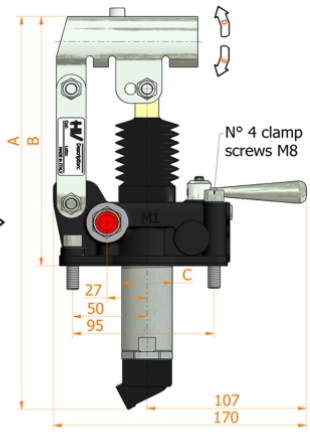

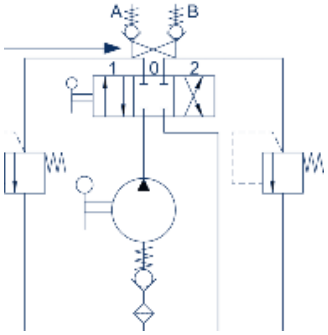

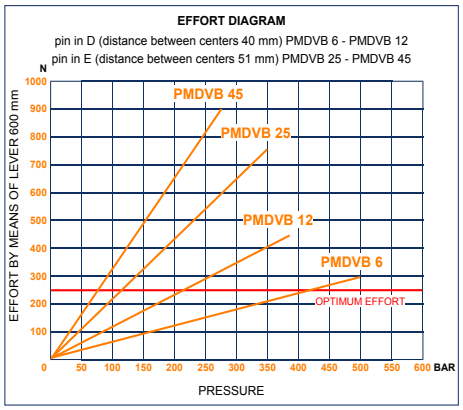

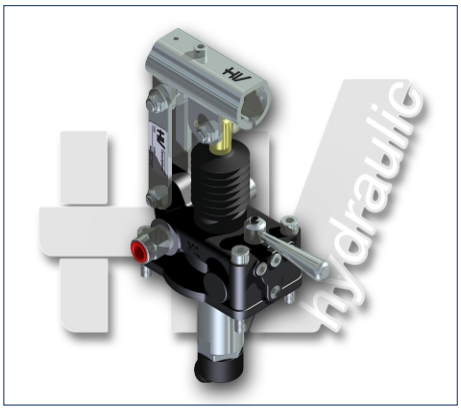

DISPLACEMENT cm³	A mm	B mm	C mm	D °	E °	ACTUAL DISPLACEMENT cm³	PRESSURE BAR		MASS KG	CODE WITHOUT BELLOWS	CODE WITH BELLOWS
							OPTIMAL	MAX			
6	253	166	34	26	31	6,970	420	500	3,400	6059.0104	6059.0105
12	253	166	34	26	31	12,095	220	380	3,400	6060.0104	6060.0105
25	273	172	34	30	30	25,280	120	350	3,450	6061.0104	6061.0105
45	283	172	40	45	33	44,532	80	280	3,500	6062.0104	6062.0105